50*50*10 MM SERIES

*馬達 MOTOR:

4極無刷馬達 4pole brushless DC motor

*框 FRAME:

成型條件 Injection molded thermal plastic

PBT+30%GF UL 94V-0

*扇葉 IMPELLER:

成型條件 Injection molded thermal plastic

PBT+15%GF UL 94V-0

*絕緣 INSULATION:

10MΩ/between unshackled wire

and frame at 500 VDC/m

*操作溫度與濕度

OPERATION TEMPERATURE&HUMIDITY:

-10°C~+60°C,35%~85%RH

*儲存溫度與濕度

STORAGE TEMPERATURE&HUMIDITY:

-40°C~+70°C,35%~85%RH

*導線 WIRES:

UL1007,28AWG,Red(+),Black(-)

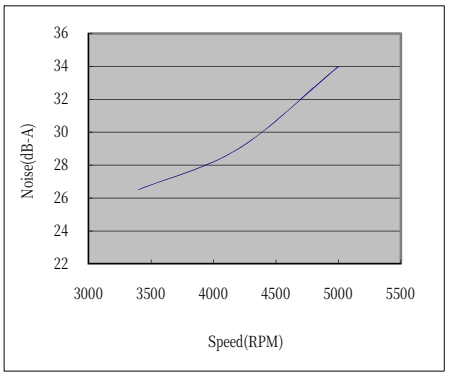

P&Q CURVE

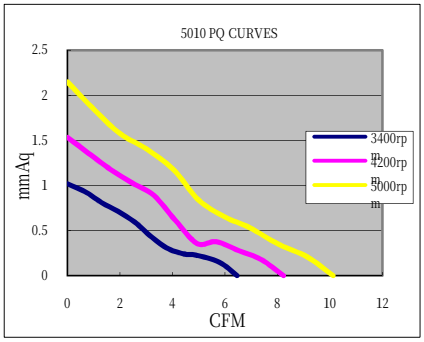

DIMENSIONS DRAWING

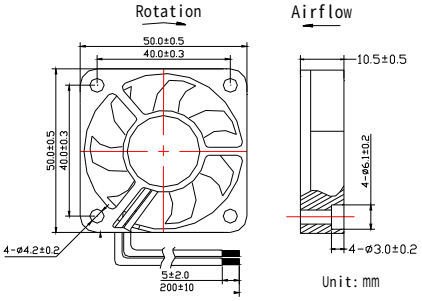

MODEL	Bearing	Rating Voltage	Rated Current	Rated Input Power	Operating Voltage range	Speed	Air Flow	Static Pressure	Noise
PART NO.		VDC	Amp	Watts	VDC	RPM	CFM	mm-H_2O	dB-A
A5010H05D	Two Ball	5	0.30	1.50	4.5 to 6	5000	10.19	2.71	34
A5010M05D			0.24	1.20	4.5 to 6	4200	8.60	2.03	29
A5010L05D			0.18	0.90	4.5 to 6	3400	7.21	1.58	25
A5010H05C	Ball& Sleeve		0.30	1.50	4.5 to 6	5000	10.19	2.71	34
A5010M05C			0.24	1.20	4.5 to 6	4200	8.60	2.03	29
A5010L05C			0.18	0.90	4.5 to 6	3400	7.21	1.58	26.5
A5010H05S	Sleeve		0.30	1.50	4.5 to 6	5000	10.19	2.71	34
A5010M05S			0.24	1.20	4.5 to 6	4200	8.60	2.03	29
A5010L05S			0.18	0.90	4.5 to 6	3400	7.21	1.58	26.5
A5010H12D	Two Ball	12	0.14	1.68	6 to 13	5000	10.19	2.71	34
A5010M12D			0.11	1.32	7 to 13	4200	8.60	2.03	29
A5010L12D			0.08	0.96	7 to 13	3400	7.21	1.58	26.5
A5010H12C	Ball& Sleeve		0.14	1.68	6 to 13	5000	10.19	2.71	34
A5010M12C			0.11	1.32	7 to 13	4200	8.60	2.03	29
A5010L12C			0.08	0.96	7 to 13	3400	7.21	1.58	26.5
A5010H12S	Sleeve		0.14	1.68	6 to 13	5000	10.19	2.71	34
A5010M12S			0.11	1.32	7 to 13	4200	8.60	2.03	29
A5010L12S			0.08	0.96	7 to 13	3400	7.21	1.58	25

USA Phone:+1-603-792-346 Fax:+1-603-792-3461
http://www.vettecorp.com
ASIA TAIWAN Phone:+886-2-7720-1188 Fax:+886-2-7720-1166
CHINA Phine:+86-769-83377088 Fax:+86-769-83710088